© Copyright: No part of this drawing or design shall be reproduced without authority or consent from Company. All references herein are deemed confidential

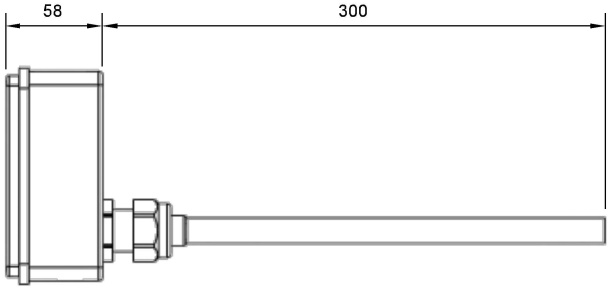

TOP VIEW

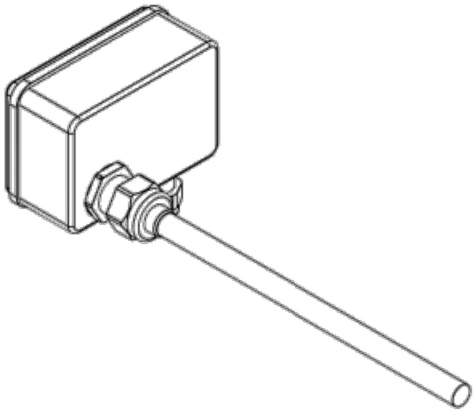

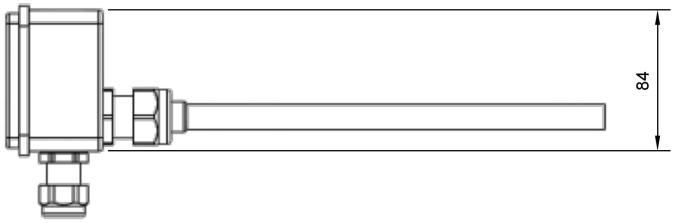

SIDE VIEW

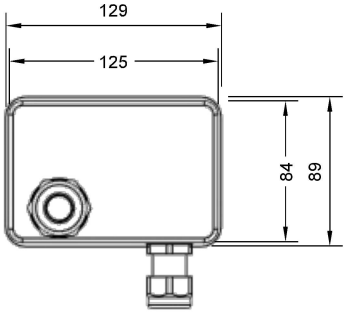

ELECTRICAL CONNECTIONS				
L	N	NO	C	NC
AVAILABLE IN 240V AC OR 24V DC				

ASSEMBLY INSTRUCTIONS:

? Assemble probe through the gland and tighten.
? Mount the box on the ductwork using 25mm hole saw for the probe.
? Mount the box toward the bottom of the duct.
? Refrigeration gas is heavier than air.
? Connect electrical wiring.

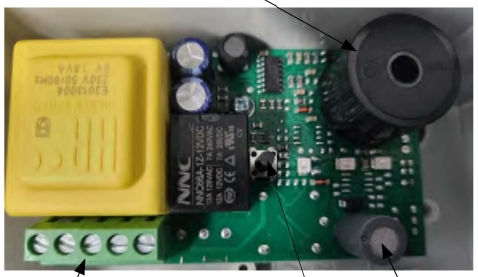

AVANTAGE

Project
CUSTOM DUCT MOUNTED GAS SENSOR

Title
DUCT MOUNTED REFRIGERATION GAS SENSOR

Drawn	Status	Dat.
J.O.	Released	26/08/2025 3:33 PM
A3	Sheet 1 of 1	Rev. A

S/N.

NOTES / INSTRUCTIONS

NORMAL OPERATION
GREEN LED

ALARM
RED LED / SOUND

FAULT
YELLOW LED / SOUND

DATE	CHANGE OR ADDITION